ARMARKAT® 7805

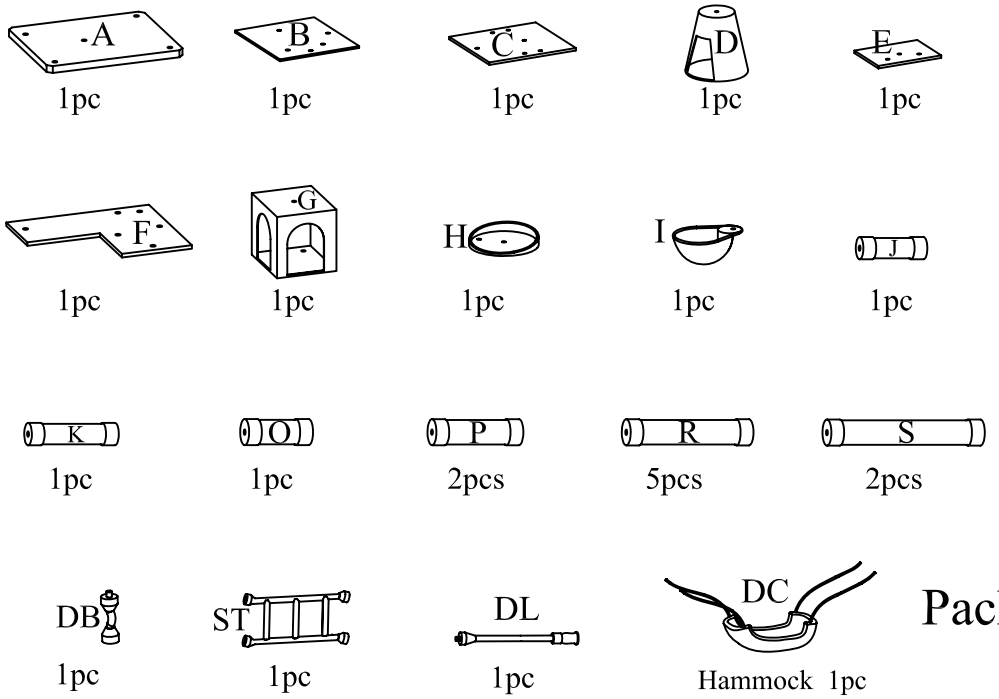

Accessory	Size	Quantity
	——	1pc
	——	1pc
V2	Ø1" / Ø25MM	3pcs
V1	Ø 13/16" / Ø20MM	1pc
W5	Ø 3/8" × 1 3/4" / Ø10mm × 45mm	16pcs
W3	Ø 3/8" × 2 3/4" / Ø10mm × 70mm	4pcs
W1	Ø 3/8" × 1 3/16" / Ø10mm × 30mm	3pcs
Y3	Ø 1/4" × 1 3/16" / Ø6mm × 30mm	5pcs

Packing List

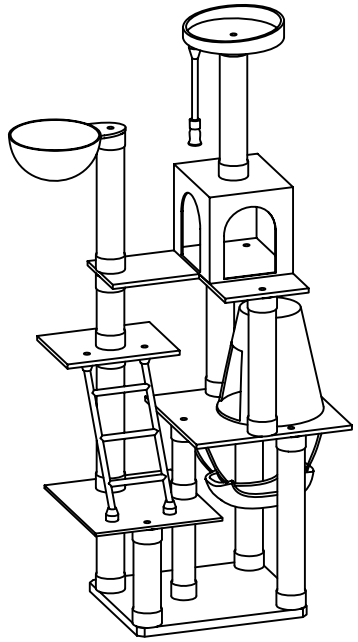

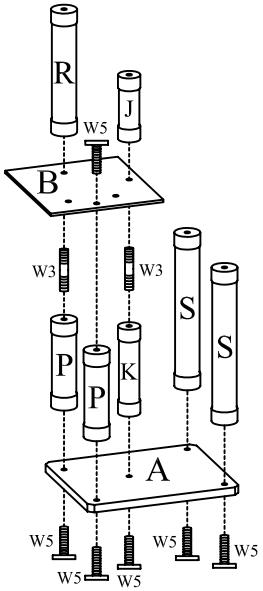

step1

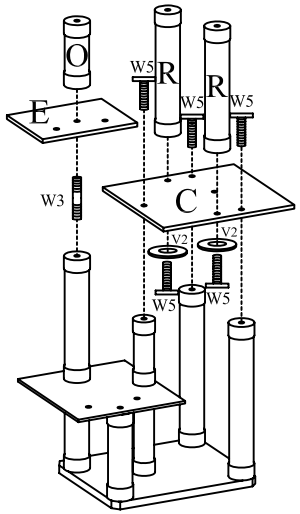

step2

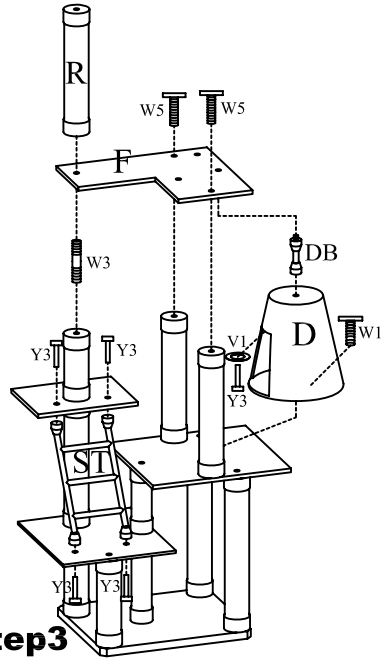

step3

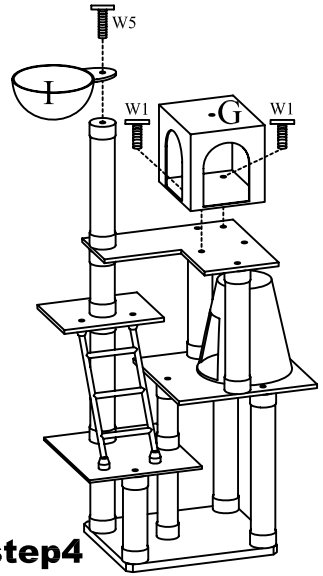

step4

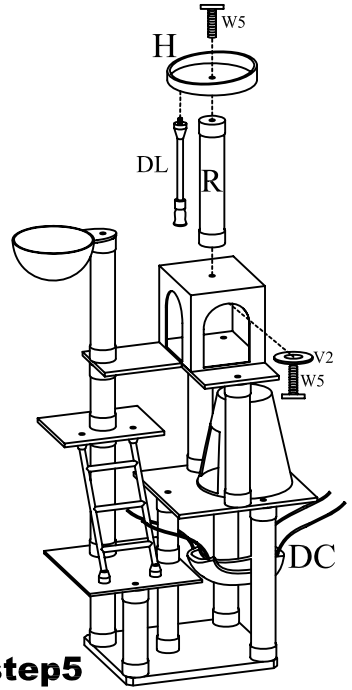

step5